QSS
SENSORS AND COMPONENTS
QSS Quality Systems Solutions GmbH
Aemetstrasse 5
CH-8344 Bäretswil
T 0041 44 242 0000
F 0041 44 242 0010
info@qss-solutions.ch
www.qss-solutions.ch

nirox
OPTOELECTRONICS

optical thickness measurement for medical pipes

m-Thick systems

m-Thick: optical thickness measurement

presented in collaboration with **AEROEL srl**

patented by **NIROX srl**, it represents the latest measuring solution available on the market to optically measure thickness

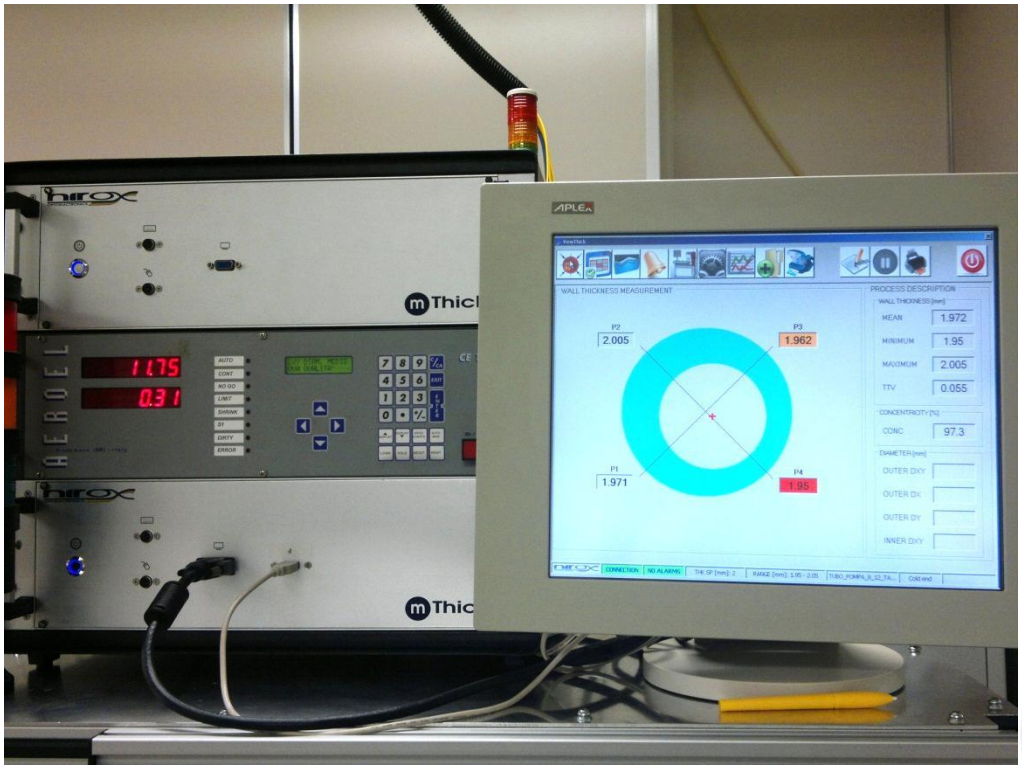

QSS
SENSORS AND COMPONENTS
QSS Quality Systems Solutions GmbH
Aemetstrasse 5
CH-8344 Bäretswil
T 0041 44 242 0000
F 0041 44 242 0010
info@qss-solutions.ch
www.qss-solutions.ch

QSS
SENSORS AND COMPONENTS
QSS Quality Systems Solutions GmbH
Aemetstrasse 5
CH-8344 Bäretswil
T 0041 44 242 0000
F 0041 44 242 0010
info@qss-solutions.ch
www.qss-solutions.ch

nirox OPTOELECTRONICS

how does it work?

measuring is based on the light reflected at entrance and exit interfaces (r1 and r2)

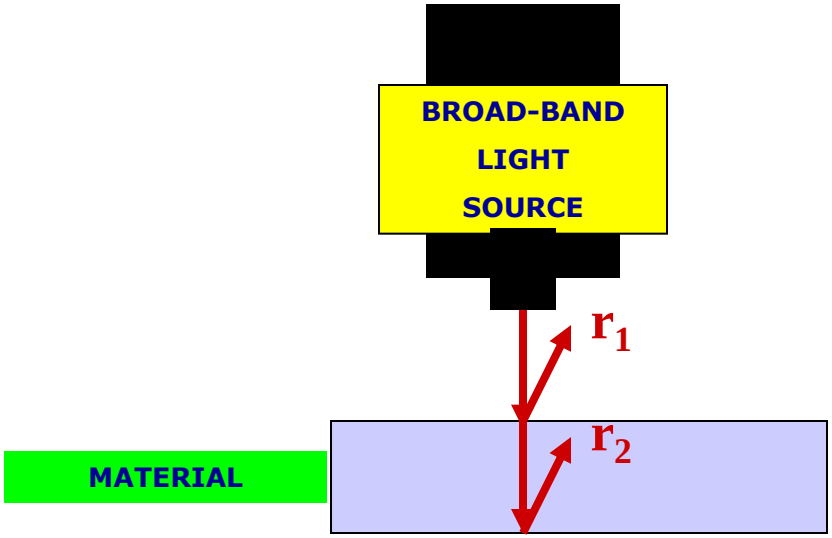

optical head collects both reflections and makes it possible to obtain interference between them

the resulting optical signal intensity has a component directly related to the physical thickness *d* and the index of refraction *n* of the material

QSS
SENSORS AND COMPONENTS
QSS Quality Systems Solutions GmbH
Aemetstrasse 5
CH-8344 Bäretswil
T 0041 44 242 0000
F 0041 44 242 0010
info@qss-solutions.ch
www.qss-solutions.ch

nirox OPTOELECTRONICS

main advantages

- ✓ **one-sided** measurement (reflection)
- ✓ high **accuracy**
- ✓ **non-contact**, non destructive measurement
- ✓ light used is **not dangerous**
- ✓ **easy to use**
- ✓ **quick integration** in laboratory and production lines
- ✓ **up to eight optical head** for thickness profile measurement

QSS
SENSORS AND COMPONENTS
QSS Quality Systems Solutions GmbH
Aemetstrasse 5
CH-8344 Bäretswil
T 0041 44 242 0000
F 0041 44 242 0010
info@qss-solutions.ch
www.qss-solutions.ch

nirox OPTOELECTRONICS

technical specs

specification	m-Thick	
	EP3 version	EP4 version
measuring range (n=1.5)	0.15 – 1.8 mm	0.15-4.0 mm
measurement rate [measurements/sec.]	up to 120 measurements/second*	
accuracy	< 0.3 micron	
optical head working distance	50 mm	
measuring spot diameter	< 0.05 mm	
optical head temperature working range	0 - 70 °C	

* measuring unit is multiplexed over optical probes, thus profile measurement per second is 120/(number of optical probes)

QSS
SENSORS AND COMPONENTS
QSS Quality Systems Solutions GmbH
Aemetstrasse 5
CH-8344 Bäretswil
T 0041 44 242 0000
F 0041 44 242 0010
info@qss-solutions.ch
www.qss-solutions.ch

nirox OPTOELECTRONICS

mechanical integration

measuring before cutting machine (e.g. next to laser micrometer) for process control and production report

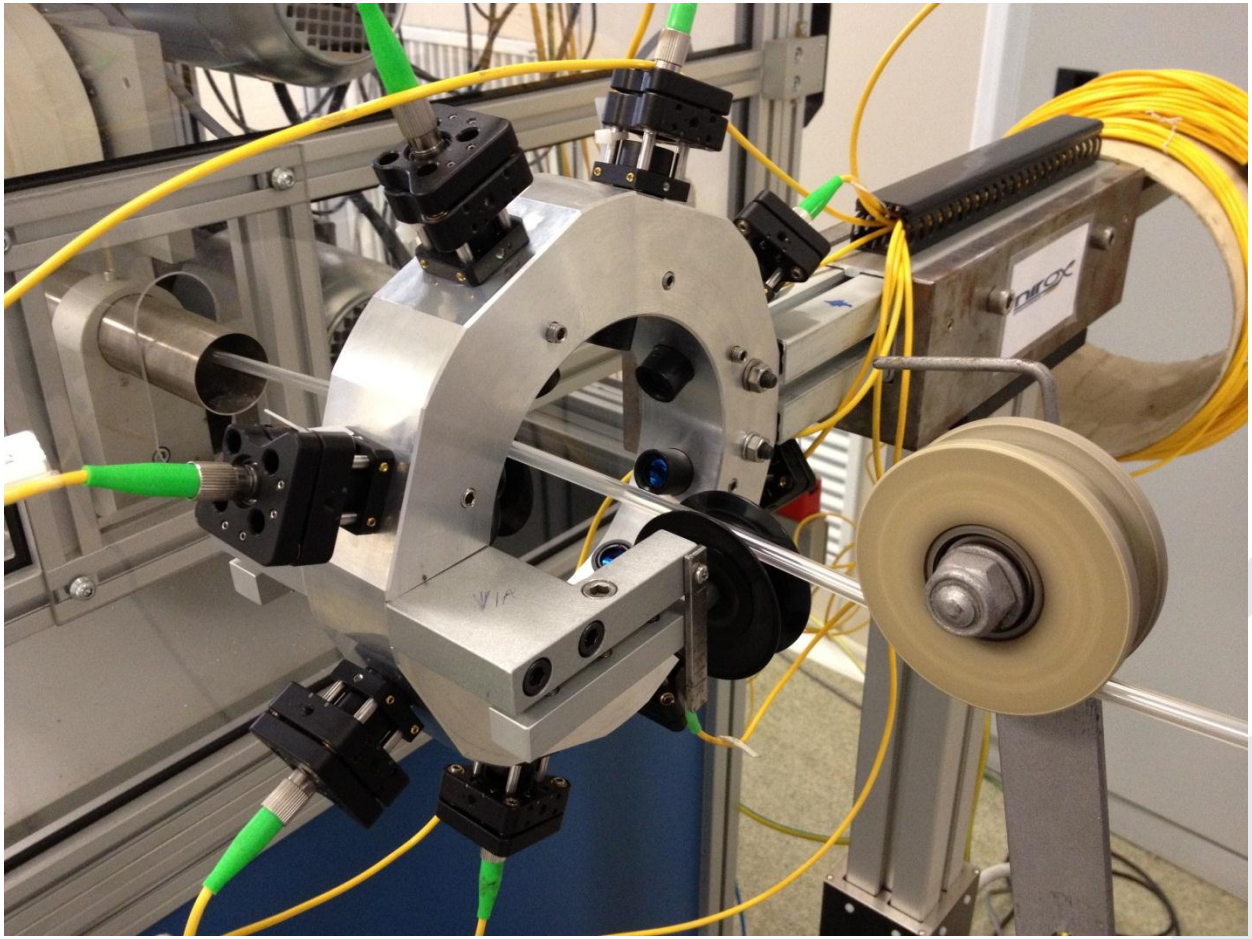

QSS
SENSORS AND COMPONENTS
QSS Quality Systems Solutions GmbH
Aemetstrasse 5
CH-8344 Bäretswil
T 0041 44 242 0000
F 0041 44 242 0010
info@qss-solutions.ch
www.qss-solutions.ch

nirox OPTOELECTRONICS

ViewThick control software

connected by **TCP/IP** to the measuring unit, it's the user-friendly control software

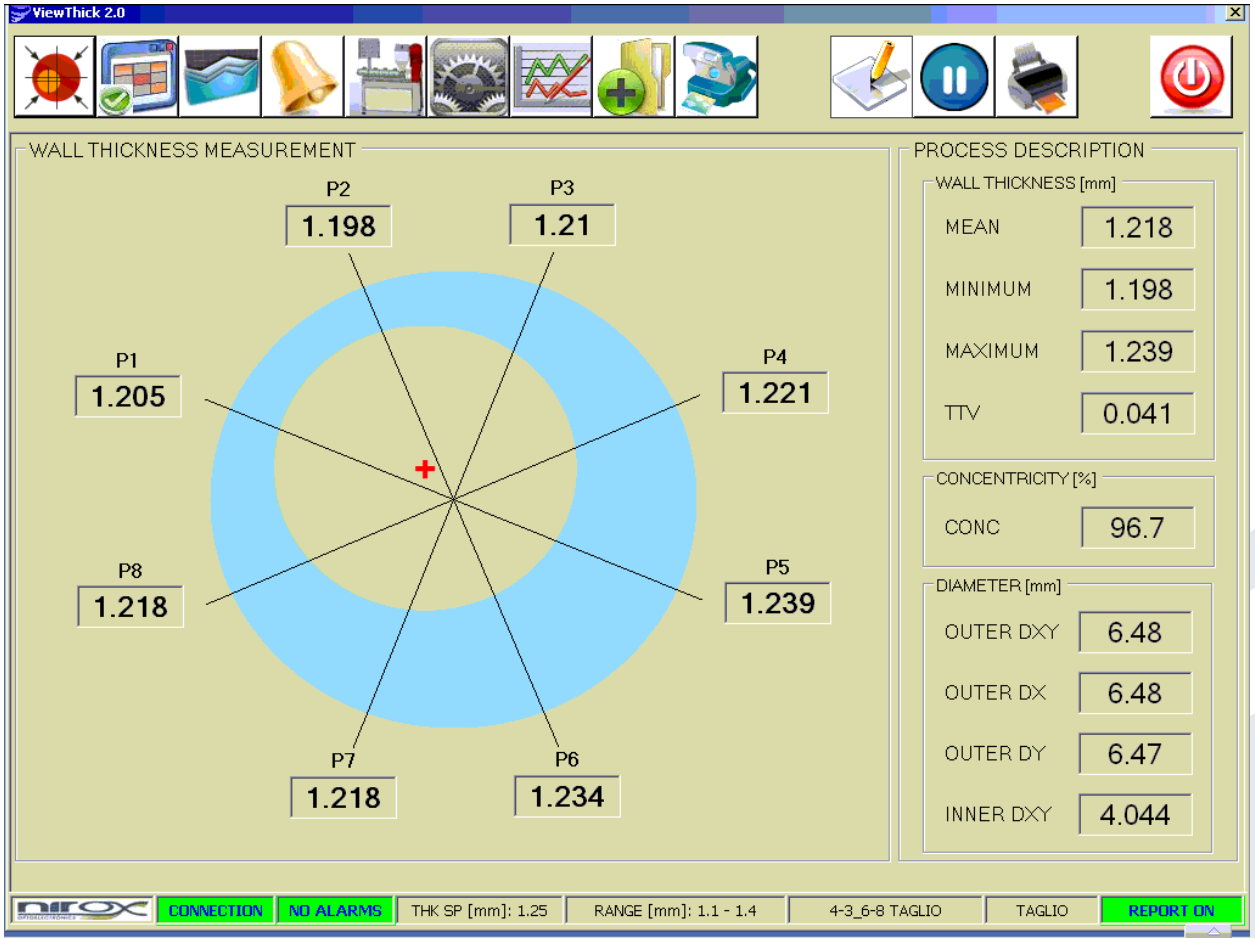

QSS
SENSORS AND COMPONENTS
QSS Quality Systems Solutions GmbH
Aemetstrasse 5
CH-8344 Bäretswil
T 0041 44 242 0000
F 0041 44 242 0010
info@qss-solutions.ch
www.qss-solutions.ch

nirox OPTOELECTRONICS

ViewThick control software

m-Thick system interface

- displays measured data from optical probes for fast product centering
- graphically represents measured data trends

full integration with Aeroel laser micrometer

- diameter data capture, visualization and reporting

calculation of several process capability indexes (**Cp**, **Cpk**, concentricity and Total Thickness Variation)

QSS
SENSORS AND COMPONENTS
QSS Quality Systems Solutions GmbH
Aemetstrasse 5
CH-8344 Bäretswil
T 0041 44 242 0000
F 0041 44 242 0010
info@qss-solutions.ch
www.qss-solutions.ch

nirox OPTOELECTRONICS

ViewThick control software

production **alarm managing** (e.g. out of thickness tolerance production)

production reports:

- **thickness** statistic
- **concentricity** statistic
- **diameter** statistic from Aeroel laser micrometer

QSS
SENSORS AND COMPONENTS
QSS Quality Systems Solutions GmbH
Aemetstrasse 5
CH-8344 Bäretswil
T 0041 44 242 0000
F 0041 44 242 0010
info@qss-solutions.ch
www.qss-solutions.ch

nirox OPTOELECTRONICS

typical production trends

thickness, concentricity (not showed) and Total Thickness Variation (TTV) trends

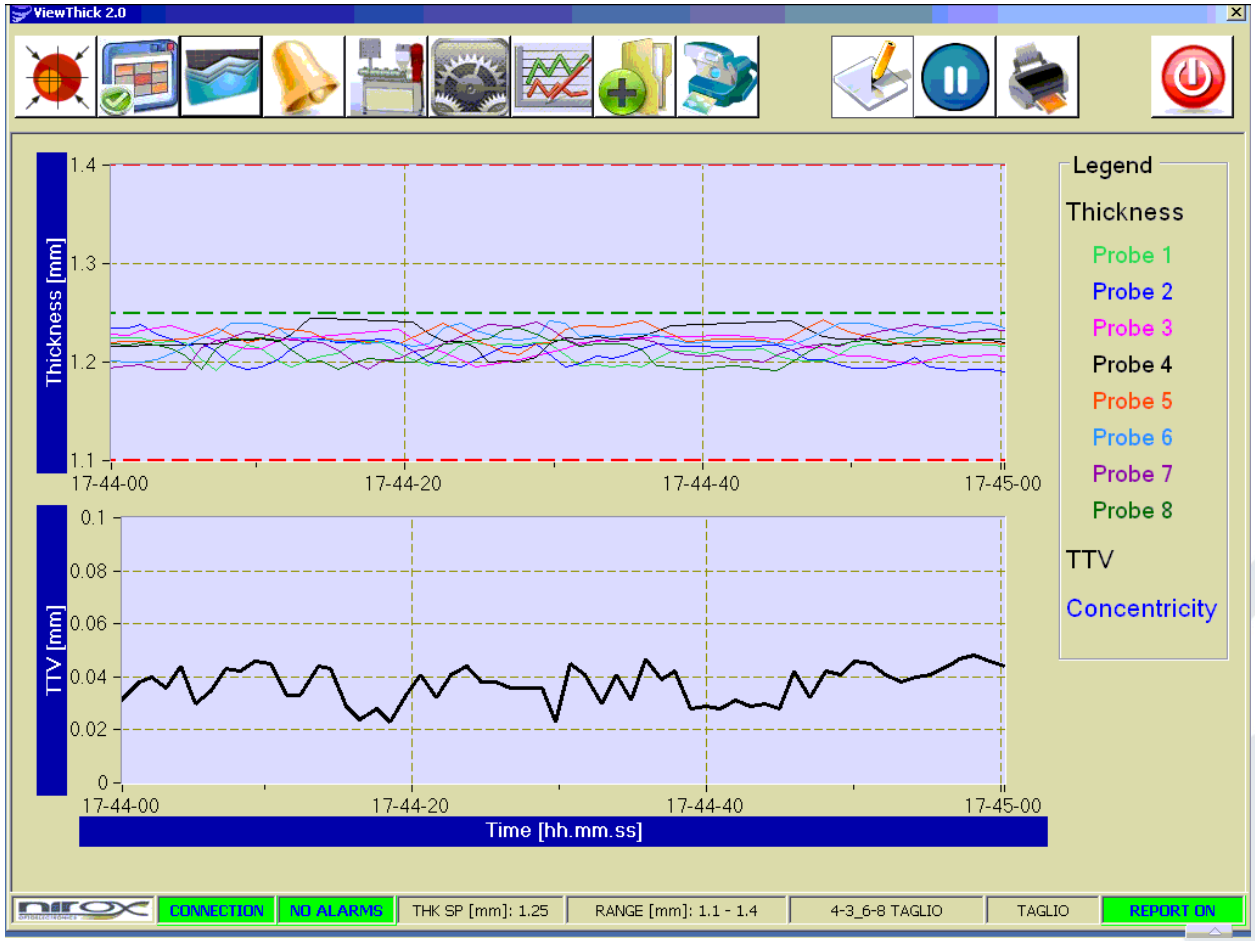

QSS
SENSORS AND COMPONENTS
QSS Quality Systems Solutions GmbH
Aemetstrasse 5
CH-8344 Bäretswil
T 0041 44 242 0000
F 0041 44 242 0010
info@qss-solutions.ch
www.qss-solutions.ch

nirox OPTOELECTRONICS

typical production report

NIROX s.r.l — REPORT 03-02-12 14.01.31

RIFERIMENTI PRODOTTO

LINEA :
PRODOTTO :
OPERATORE :
BOBINA : 1

DIAMETRO NOMINALE [mm] : 6.48
SPESSORE NOMINALE [mm] : 1.25
TOLLERANZA DIAMETRO [mm] : 0.1
TOLLERANZA SPESSORE [mm] : 0.15
TOLLERANZA TTV [mm] : 0.15

ISTOGRAMMA TTV

DA	A	%MIS	
0	0.011	0	SP
0.011	0.022	0	
0.022	0.033	8	
0.033	0.044	52	
0.044	0.055	36	
0.055	0.066	4	
0.066	0.077	0	
0.077	0.088	0	
0.088	0.099	0	
0.099	0.11	0	
0.11	0.121	0	
0.121	0.132	0	
0.132	0.143	0	
0.143	0.154	0	TOL+
0.154	0.165	0	
0.165	0.176	0	
0.176	0.187	0	
0.187	0.198	0	
0.198	0.209	0	
0.209	0.22	0	
0.22	0.231	0	
0.231	0.242	0	
0.242	0.253	0	
0.253	0.264	0	
0.264	0.275	0	
0.275	0.286	0	
0.286	0.297	0	
0.297	0.308	0	
0.308	0.319	0	
0.319	+INF	0	

DATI RIASSUNTIVI

ACQUISIZIONE	ORA INIZIO :	12.20.35	ORA FINE :	14.01.31
SPESSORE	MEDIO [mm] :	1.206	DEV. ST. [µm] :	12.9
	MINIMO [mm] :	1.163	MASSIMO [mm] :	1.275
	Cp :	3.88	Cpk :	2.74
TTV	MEDIO [mm] :	0.042	DEV. ST. [µm] :	7.2
	MINIMO [mm] :	0.024	MASSIMO [mm] :	0.055
	Cp :	6.94		
DIAMETRO	MEDIO [mm] :	6.475	DEV. ST. [µm] :	13.1
	MINIMO [mm] :	6.425	MASSIMO [mm] :	6.52
	Cp :	2.54	Cpk :	2.42

TTV

NIROX s.r.l — REPORT 03-02-12 14.01.31

RIFERIMENTI PRODOTTO

LINEA :
PRODOTTO :
OPERATORE :
BOBINA : 1

DIAMETRO NOMINALE [mm] : 6.48
SPESSORE NOMINALE [mm] : 1.25
TOLLERANZA DIAMETRO [mm] : 0.1
TOLLERANZA SPESSORE [mm] : 0.15
TOLLERANZA TTV [mm] : 0.15

ISTOGRAMMA SPESSORE

DA	A	%MIS	
0	0.912	0	
0.912	0.933	0	
0.933	0.954	0	
0.954	0.975	0	
0.975	0.996	0	
0.996	1.017	0	
1.017	1.038	0	
1.038	1.059	0	
1.059	1.08	0	
1.08	1.101	0	TOL-
1.101	1.122	0	
1.122	1.143	0	
1.143	1.164	0	
1.164	1.185	3.5	
1.185	1.206	46.7	
1.206	1.227	42.5	
1.227	1.248	7.2	
1.248	1.269	0.2	SP
1.269	1.29	0	
1.29	1.311	0	
1.311	1.332	0	
1.332	1.353	0	
1.353	1.374	0	
1.374	1.395	0	
1.395	1.416	0	TOL+
1.416	1.437	0	
1.437	1.458	0	
1.458	1.479	0	
1.479	1.5	0	
1.5	+INF	0	

DATI RIASSUNTIVI

ACQUISIZIONE	ORA INIZIO :	12.20.35	ORA FINE :	14.01.31
SPESSORE	MEDIO [mm] :	1.206	DEV. ST. [µm] :	12.9
	MINIMO [mm] :	1.163	MASSIMO [mm] :	1.275
	Cp :	3.88	Cpk :	2.74
TTV	MEDIO [mm] :	0.042	DEV. ST. [µm] :	7.2
	MINIMO [mm] :	0.024	MASSIMO [mm] :	0.055
	Cp :	6.94		
DIAMETRO	MEDIO [mm] :	6.475	DEV. ST. [µm] :	13.1
	MINIMO [mm] :	6.425	MASSIMO [mm] :	6.52
	Cp :	2.54	Cpk :	2.42

thickness

NIROX s.r.l — REPORT 03-02-12 14.01.31

RIFERIMENTI PRODOTTO

LINEA :
PRODOTTO :
OPERATORE :
BOBINA : 1

DIAMETRO NOMINALE [mm] : 6.48
SPESSORE NOMINALE [mm] : 1.25
TOLLERANZA DIAMETRO [mm] : 0.1
TOLLERANZA SPESSORE [mm] : 0.15
TOLLERANZA TTV [mm] : 0.15

ISTOGRAMMA DIAMETRO

DA	A	%MIS	
0	6.277	0	
6.277	6.291	0	
6.291	6.305	0	
6.305	6.319	0	
6.319	6.333	0	
6.333	6.347	0	
6.347	6.361	0	
6.361	6.375	0	
6.375	6.389	0	TOL-
6.389	6.403	0	
6.403	6.417	0	
6.417	6.431	0.2	
6.431	6.445	0.9	
6.445	6.459	7.9	
6.459	6.473	31.4	
6.473	6.487	42.7	SP
6.487	6.501	15.9	
6.501	6.515	1	
6.515	6.529	0.2	
6.529	6.543	0	
6.543	6.557	0	
6.557	6.571	0	
6.571	6.585	0	TOL+
6.585	6.599	0	
6.599	6.613	0	
6.613	6.627	0	
6.627	6.641	0	
6.641	6.655	0	
6.655	6.669	0	
6.669	+INF	0	

DATI RIASSUNTIVI

ACQUISIZIONE	ORA INIZIO :	12.20.35	ORA FINE :	14.01.31
SPESSORE	MEDIO [mm] :	1.206	DEV. ST. [µm] :	12.9
	MINIMO [mm] :	1.163	MASSIMO [mm] :	1.275
	Cp :	3.88	Cpk :	2.74
TTV	MEDIO [mm] :	0.042	DEV. ST. [µm] :	7.2
	MINIMO [mm] :	0.024	MASSIMO [mm] :	0.055
	Cp :	6.94		
DIAMETRO	MEDIO [mm] :	6.475	DEV. ST. [µm] :	13.1
	MINIMO [mm] :	6.425	MASSIMO [mm] :	6.52
	Cp :	2.54	Cpk :	2.42

diameter

get in touch with us

for more informations or field demo please feel free to contact:

QSS
SENSORS AND COMPONENTS

QSS Quality Systems Solutions GmbH
Aemetstrasse 5
CH-8344 Bäretswil
T 0041 44 242 0000
F 0041 44 242 0010
info@qss-solutions.ch
www.qss-solutions.ch